H. GREEN REFERENCE GUIDE AND SUBMITTAL REQUIREMENTS

SITE AND LAND USE

SL-1	***Make Use of Passive Solar Heating, Cooling, and Lighting; Ventilation; & Shading***

Requirement:

Passive Solar - The basic natural processes used in passive solar energy are the thermal energy flows associated with radiation, conduction and natural convection. When sunlight strikes a building, the building materials can reflect, transmit or absorb the solar radiation. These basic responses to solar heat lead to design elements, material choices and placements that can provide heating and cooling effects in a home. Passive solar energy means that mechanical means are not employed to utilize solar energy.

Passive Ventilation & Shading – In addition, buildings and windows should be oriented to resist cold Northern winds and lack of sun in the winter and open to warmer southern breezes in the summer. Apply suitable roof overhangs, awnings and/or deciduous trees.

Site new construction projects for passive solar strategies including proper window types and placement, proper overhangs and passive shading. Consider (1) elongating the building on an east-west axis; (2) placing interior spaces requiring the most light, heating and cooling should be along the south face of the building; (3) utilizing a narrow floor plate (less than 40 feet), single-loaded corridors, and an open floor plan to optimize daylight penetration and passive ventilation; and (4) shade through use of deciduous trees, overhangs and/or canopies on the south and west to prevent the summer sun from entering the interior.

Benefit:
Passive design greatly increases actual comfort without the use of mechanical equipment, thereby lowering energy costs.

Submittal:
1. Site plan indicating wind and sun patterns and paths. Locate the placement or maintenance of desirable trees to utilize passive design.
2. Elevation indicating solar patterns, with exterior shading devices where applicable.
3. If the project is in an infill lot with no alternate site options, or there is something that precludes the project from incorporating passive solar design, please submit a narrative to this effect and what attempts have been made to comply.

SL-2	***Provide a Preservation Plan***

Requirement:

Minimize disturbed area and preserve viable existing trees and vegetation, including street trees.

Develop a tree/plant preservation plan that designates trees and existing vegetation to be protected during all construction activities that is clearly marked on all drawings and site.
Clearly communicate this information to all subcontractors

Benefit:
Existing trees can provide shade, reduce cooling loads and provide comfortable outdoor spaces in summer.

Submittal:
1. Site plan with tree/plant preservation plan highlighted
2. Certification that the preservation plan has been reviewed by all subcontractors and is clearly posted on job site

INDOOR AIR QUALITY

IA-1	***Ducts and HVAC protected from dust during construction***

Requirement:
Completely seal duct and HVAC equipment opening with plastic film and tape, or other suitable material, until after final cleaning of unit. If ducted system is used for construction heating, install MERV 8 filters on all return grills for duration of construction

Benefit:
Ductwork is exposed to large amounts of dust, debris and other foreign material during the construction process. If not properly flushed prior to occupancy, air quality and furnace performance will be affected negatively. The most effective preventative strategy to reduce unwanted and possibly harmful particulates in ductwork and interior ambient air, openings in new ducts and other HVAC equipment must be covered during all phases of construction.

Submittal:
1. Contract language indicating duct and equipment protection requirement and method
2. Signed statement indicating completion and compliance with requirement
3. 3 dated photos of protected ductwork and equipment

IA-2	***Low VOC Interior Paints & Finishes***

Requirement:
VOC limits for all paints, sealants and adhesives outlined in **VOC Chart**, Appendix I.
(Note: this includes carpet adhesives)

Benefit:
The strong smell that paint, glues and other adhesives emit is from the evaporation of volatile organic compound (VOC's). VOC's contribute to poor indoor air quality problems, photochemical smog and include a variety of chemicals that can have both short and long-term health effects.

In addition, latex paints often require biocides and fungicides to protect paint from mold, mildew and bacteria. Most of the off gassing occurs during and in the first few days after application, but the health and comfort impacts on painters and occupants can be substantial during that period. Common effects are eye and respiratory irritation, headaches, dizziness, visual disorders, and memory impairment and in severe cases, cancer.

Submittal:

Complete list of all paints, sealants and adhesives with VOC content in g/l for each item

The website www.toolbase.org/secondaryTasp?TrackID=&CategoryID=1312 has information on low and no-VOC paints, including a list of paint manufacturers that carry these products.

IA-3 Low VOC Adhesives & Sealants

Requirement:
See IA-8 and Appendix I: **VOC Guide**

IA-4 Durable, Healthy Flooring

Requirement:
Meet requirements of Appendix I: **Flooring Guide** for detailed flooring options.

Benefit:
The New Jersey Affordable Green Program developed this Flooring Guide that seeks to promote the integration of highly durable, low maintenance materials in high use and moisture-laden areas of the home. Utilizing hard surface flooring in high use areas reduces waste and increases indoor air quality.

Submittal:
Floor plan highlighting flooring type in each area of building.

IA-5 Medium Efficiency (or higher) air filters in ducted forced air systems

Requirement:
Pleated furnace filters, minimum MERV 8

Benefit:
Pleated filters capture more particulates than typical furnace filters. MERV 8 filters are 30-35% more effective in eliminating air particulates than typical filters.

Submittal
1. Filter cut sheet showing MERV value
2. For homeownership units signed statement indicating box (minimum 6) filters left on site near furnace

IA-6 All combustion devices power vented or sealed combustion

Requirement:
With the exception of gas stoves, all combustion devices must be power vented or sealed combustion

Benefit:
Full combustion burning of natural gas produces carbon dioxide, water vapor, nitrogen, carbon monoxide, and nitrogen oxides - products which can pose serious health and safety risks to occupants. Sealed combustion or power vented appliances isolate the designated supply of combustion air from the living

space, virtually eliminating the risk of back-drafting these products of combustion into the home, where they can be ingested.

Submittal:
Combustion equipment cut sheets, **with model numbers highlighted**.
Clothes dryer exhaust: Clothes dryers must be vented directly to the outside.

IA-7 Encapsulation of non-UF (Urea Formaldehyde) free composites

Requirement:
If Urea Formaldehyde is in any particleboard or other composite wood product incorporated into the interior of the project (cabinetry, countertops, trim, underlayment, etc.), all exposed edges must be coated and sealed with water-based polyurethane to slow the out-gassing rate of harmful toxins. Sealing can be done in shop, before delivery.

Note: There are a growing number of manufacturers producing particleboard, some of which are composed of agricultural waste, manufactured without urea formaldehyde-based glues.

Benefit:
Formaldehyde is a volatile organic compound found in a broad range of products such as particleboards, upholstery, drapery, carpet, furniture, construction material, and dry clean clothes. Exposure to formaldehyde can cause wheezing and coughing, skin rashes, severe allergic reactions, and possibly cancer.

Submittal:
1. Contract language indicating what items will be sealed,
2. A list of all interior wood composites, indicating which are zero formaldehyde.
3. Provide cut sheets for zero-formaldehyde products
4. Signed statement indicating completion and compliance

IA-8 Automatic Bathroom Ventilation

Requirement:
Perform the ventilation calculation to install 1.5 sone fans that directly vent to the outside in bathroom and kitchen with upgraded timer control.

Benefit:
The elimination of fan noise helps to ensure ventilation utilization. This will increase ventilation and minimize potential odors, moisture, and smoke.

Submittal:
Spec Sheet and note on mechanical plans.

IA-9 CRI Green Label Plus, low pile carpets with recycled content

Requirement:
In general, carpet is a difficult product to label as sustainable. It is used so often in such large amounts, that the volume of waste generated from its high frequency of replacement does not equal its overall

benefits. To reduce the waste stream and improve IAQ, limit carpet application in high use areas and utilize low VOC, durable carpet with at least 20% pre AND post consumer recycled content. The recycled content varies but most manufacturers use plastic bottles as the recycled content. There are also manufacturers that will set up a buy back program for developers to sell the purchased carpets back once the material is at the end of its life cycle. This is especially advantageous to developers responsible for maintaining and operating their projects.
****Meet the requirements of the Flooring Guide (Appendix) for accepted installation areas for carpet.**
****Also, use tack down instead of glue down carpets.**

Benefit:
Reduced maintenance costs, reduced landfill material and healthier indoor air environments. There are also manufacturers that will set up a buy back program for developers to sell the purchased carpets back once the material is at the end of its life cycle.

This is especially advantageous to developers responsible for maintaining and operating their projects.

Submittal:
Carpet cut sheets for all carpet installed, clearly highlighting Green-Label-Plus status and tack-down installation procedures.

BUILDING DURABILITY & MOISTURE CONTROL

DM-1 EEBA Window Detail*

Requirement:
Apply window pan flashing over building paper at sill and corner patches. See Appendix II: EEBA Window Detail.

***Note:** Alternate method acceptable for brick and masonry rehab projects

Benefit:
Common areas of window leakage occur at sill and header corners. Proper attention to window detailing reduces this water infiltration possibility in window assembly.

Submittal:
1. Section drawing showing window flashing detail
2. Specification indicating flashing method and products

DM-2 Exterior Wall Drainage Plane

Requirement:
Provide exterior wall drainage plane using building paper, housewrap or layered water resistant sheathings (rigid insulation or a foil covered structural sheathing) with seams taped or sealed.

Benefit:
Proper attention to leak prevention reduces this water infiltration possibility in wall assembly.

Submittal:
1. Section drawing showing detail
2. Specification indicating method and products

DM-3	***Gutter Downspouts discharge at least 3' from Foundation***

Benefit:
This reduces the amount of water that may pool near the building foundation.

Submittal:
1. Specifications
2. Drawing detail

ENERGY EFFECIENCY

EE- 1	***All Units Energy Star Certified***

Requirement:
All LIHTC Projects are required to be Energy Star Certified as a threshold. Once a project is funded, developer must contact, depending on location of site, the appropriate Energy Star program provider to guide project through Energy Star process.

For details please review: http://energystar.gov/
http://www.njenergystarhomes.com/
Contact Info: http://www.njenergystarhomes.html/consumer/contact_us.html

NOTE: Historic, master-metered and moderate rehab projects are <u>not exempt</u> from Energy Star Certification. <u>Alternative Energy Star Certification requirements are located within the QAP</u>. If needed we will work with the developer to come up with an equivalent to Energy Star – in order to do the most possible.

Benefit:
Energy Star was introduced in 1992 by the U.S. Environmental Protection Agency (EPA) as a voluntary labeling program designed to identify and promote energy efficient products in order to reduce carbon dioxide emissions. Housing built to New Jersey Energy Star standards combine improved design with better overall construction that are at least 30% more energy efficient than the standard home. High quality construction features include added levels of insulation; high efficiency HVAC systems; and Energy Star labeled windows that help to create greater comfort and improved indoor air quality.

Submittal:
1. Initial Energy Star partnership agreement
2. Submit a copy of the Energy Star inspection completed before the installation of Drywall and after the installation of Insulation.
3. Final Energy Star Certification

EE-2 All appliances Energy Star

Requirement:
Refrigerator, clothes washer, and dishwasher must be Energy Star rated.

Benefit:
Utilizing high efficiency compressors, better temperature control mechanisms and improved insulation and door seals, ENERGY STAR qualified refrigerators require only about half as much energy as models manufactured before 1993 and use at least 15% less energy than required by current federal standards. Energy Star dishwashing and clothes washing machines save water and energy

Submittal:
Refrigerator, clothes washer and dishwasher specs with model number and Energy Star rating
***NOTE:** All washing machines shall be horizontal axis.

EE-3 Basement Ceiling Encapsulated Insulation Batts

Requirement
If basement ceiling insulation is to be required, utilize encapsulated batts. Ceiling insulation must be adequately supported.

Benefit
Enclosed or encapsulated fiberglass reduces airborne particulates

Submittal
1. Contract language indicating encapsulated insulation,
2. Section drawing showing cut sheet for encapsulated batts
3. Signed statement indicating encapsulated batts where properly installed

EE- 4 Specify Windows w/ Low-E coating

Benefit:
Low-e glass lowers the solar heat gain coefficient by blocking out most long-wave radiation (heat) while allowing most of the short-wave radiation (light) to enter. This means that residents use less heat in the winter, and less air conditioning in the summer. This also leads to reduced mildew and deterioration of window frame.

Submittal:
Spec Sheet

EE-5 Efficient Lighting - Interior

Requirement:
Install Energy Star labeled lighting fixtures or the Energy Star Advanced Lighting Package in all interior units, and use Energy Star or high-efficiency commercial grade fixtures in all common areas and outdoors.

Benefit:
Energy Star qualified lighting uses 2/3 less energy and lasts six to ten times longer than traditional lighting. It also lowers utility costs and green house gas emissions.

Submittal:
1. Cut sheets of all lighting noting Energy Star.

EE-6 Occupancy and daylight cutoff lighting controls in common spaces

Requirement:
Lighting in community & meeting rooms, laundry, public bathrooms, and other common spaces, must have occupancy and automatic daylight controls to reduce energy use when unoccupied. Common space DOES NOT include hallways, stairwells and any means of egress.

Benefit:
Utilizing lighting only when needed reduces cost

Submittal
1. Hard copy of completed **Lighting Fixture Schedule**, Reference Appendix III.
   All columns must be filled in.
2. Electronic copy of completed **Lighting Fixture Schedule**.

EE- 7 Programmable thermostats w/ Occupant Training

Requirement:
Provide a seven-day, digital programmable thermostat that runs on 24volts of the HVAC system, with battery backup

Benefit:
Energy savings for heating setback and cooling set-up

Submittal:
Cut sheet with exact model highlighted

See Operations & Maintenance OM-2 for training requirement

EE- 8 All ductwork must be located in conditioned space (except plenum)

Requirement:
If furnace is located in unconditioned basement, furnace supply and plenums may be located in basement, but supply and return ductwork must be located in conditioned space. All returns must be hard-ducted - No plenum or boxed joist returns are allowed. Plenums in basement must be insulated. Note that Energy Star requires mastic sealant on ductwork and plenums, which must be inspected prior to insulation. Air filter slot must be well constructed to avoid air leakage.

Benefit:

Duct leakage and thermal losses are reduced by ductwork in conditioned space. Plenum or boxed joist returns accumulate dust and debris over time and are an air quality hazard.

Submittal:
Mechanical plans for building which must show duct location

EE- 9 High Energy Factor Water Heater beyond Energy Star Requirements

Requirement:
Install water heater with energy factor greater than 60% AFUE for gas fired units and 0.95 for electric. For unit-by-unit water heaters, use electric water heater (tank type) of 0.91 EF (efficiency) or greater; a natural gas water heater (tank type) of 0.60 or greater for 50-gallon, 0.62 EF or greater for 40-gallon, or 0.65 EF or greater for an instantaneous model (tankless).

Benefit:
Higher efficiencies translates into higher cost savings

Submittal:
Provide equipment cut sheets, with model number and efficiency information as required above highlighted.

RESOURCE EFFICIENCY

RE-1 Recycle or salvage construction & demolition debris

Requirement:
Develop plan and protocol to properly sort and dispose of construction waste material separate from recycled material. Establish a system for daily collection and separation of materials designated to be recycled including concrete, metals, wood, recyclable plastics, bottles and cardboard, at a minimum. Specifications must include Waste Management Plan with Construction and Demolition waste % recycled specified.

Contractor must include in each subcontract the requirement to sort the above materials and dispose of each in the designated container or debris pile. Recycling areas shall be clearly marked to avoid co-mingling of materials.

A minimum of 50% project waste shall be diverted from landfill.

Benefit:
Recycling reduces landfill material and costs significantly less than disposing material as solid waste.

Submittal:
1. Copy of on-site recycling and waste management plan.
2. Summary of project waste diverted and recycled.
3. Submit copies of tipping receipts and a tally indicating total weight or volume recycled, weight or volume in landfill and % recycled by weight or volume. All receipts and tally must be in EITHER weight or volume, not mixed.

4. Dated photograph of dumpsters labeled for separation

Alternative Submittal to #1: Contract with hauler/recycler indicating off-site separation method and submittal 2 -4.

RE-2	***Onsite Recycling Collection Centers Accessible to All Tenants***

Requirement:
Design buildings with easy access to recycling stations that are well marked, easy to understand and accessible and compatible with township or municipal recycling program

Benefit:
Recycling reduces the amount of material directed to landfill and can reduce the cost of disposal fees.

Submittal
1. Plans highlighting recycling areas
2. Cut sheet for bins

RE-3	***Recycling plan for each unit***

Requirement:
For all properties, provide a plan for the recycling of individual unit recyclables (glass, plastic, metals, and paper).
Benefit:
Providing designated containers and space for tenants to collect recyclable materials, encourages recycling practice.

Submittal:
1. Plans highlighting recycling areas
2. Cut sheet or other information for bins

WATER CONSERVATION

WC-1	***Low-Flow Fixtures***

Requirements:
Faucets shall be a maximum of 1.5 gpm in the kitchen, and 0.5 gpm for the bathroom. Showerheads shall be a maximum of 2 gpm.

Benefits:
Showers and faucets account for approximately 25 percent of indoor water use. Saving water translates into utility savings, both by conserving water and reducing the energy required for water heating. Compared with pre-1992 fixtures, water-conserving fixtures can reduce the amount of water used in showers and sinks by 75 percent and 50 percent, respectively.

Submittal:
1. Cut sheet for fixtures

WC-2 High Efficiency Toilets

Requirements:
Toilets shall have an efficiency of 1.3 gallons per flush, or better.

Benefits:
Toilets account for approximately 20 percent of indoor water use.

Submittal:
1. Cut sheet for toilets

WC-3 Water Efficient Landscaping (Native and/or drought tolerant plants and turf)

Requirement:
Select a type of grass that can withstand drought periods and become dormant during hot, dry seasons. Install irrigation system controllers such as rain or soil moisture sensors, or use weather driven programming system. Include high efficiency nozzles and pressure regulating devices to maintain optimal pressure and prevent misting.

Turf no more than 50% pervious cover

If installing plants as an alternative, or in addition to turf areas, utilize native and/or drought resistant plants with either drip irrigation or no irrigation.

If irrigation is necessary, use recycled greywater, roof water, collected site run-off or irrigation system that will deliver up to 95% of the water supplied.

Benefit:
Native species are those that occur in the region in which they evolved over geologic time in response to physical and biotic processes characteristic of a region: the climate, soils, timing of rainfall, drought, and frost; and interactions with the other species inhabiting the local community. Thus native plants possess certain traits that make them uniquely adapted to local conditions, providing a practical and ecologically valuable alternative for landscaping, conservation and restoration projects.

The benefit of growing plants within the region they evolved is that they are more likely to thrive under the local conditions while being less likely to invade new habitats. Native plants are well adapted to local environmental conditions, maintain or improve soil fertility, reduce erosion, and often require less fertilizer and pesticides than many alien plants. These characteristics save time and money and reduce the amount of harmful run-off threatening the aquatic resources of streams, rivers, and estuaries.

Submittal:
1. Landscaping plan with list of plants, type of turf and irrigation system installed.
2. Description of how the plan meets the criteria above.

WC-4 High Efficiency Irrigation

Requirements:
Irrigation shall be either drip Irrigation or no Irrigation.

Benefits:
Accurate delivery of water reduces evaporation and eliminates overspray.

Submittal:
1. Written explanation and Site Plan including placement, type, and details.

WC-5 50% Pervious Materials for Outdoor Patios & Walkways

Requirements:
50% of material used for paving for outdoor patios and walkways are to be pervious.

Benefits:
Allowing rainwater to soak through to the ground reduces runoff, which floods our sewer systems and contaminates our natural waterways, and allows for the water to remain onsite – reducing the need to water native plants even further.

Submittal:
1. Site Plan noting pervious surfaces, and specifications of materials.

OPERATION AND MAINTENANCE

OM-1 Property Management O&M Manual and Training

Requirement:
Educate and train the property management team in the proper operation and maintenance of sustainable technologies. Include manual in 3-ring binder illustrating high performance features with product manufacturer's manual and general information and concepts of green building and energy and resource conservation.

Benefit:
Energy and resource conservation education empowers owners and encourages responsibility and sustainable behavior.

Submittal:
1. Copy of manual, including
    a. Overall maintenance schedule for owner, indicating maintenance item and frequency for that item.
    b. Copy of Owner's and installation manuals for all equipment in unit, including controls, in binder.
    c. General green building information about energy efficient and environmentally friendly products and equipment
    d. A description of all property management-relative features required within the TC green point.

2. Signed training confirmation letter for each administrative, operations and maintenance staff person, indicating each has received training. Letter template provided by HMFA, Sustainable Community Design Administrator.

(Letter will include thermostat training; filter changing training, controls training for automatic ventilation, refrigerator coil/grill cleaning etc.)

OM-2 Tenant Manual & Training

Requirement:
Provide hands-on training to tenants detailing building green features and their proper use. This can include programming the thermostat with tenants, with tenants doing the actual programming; instruction on controls for automatic bath fan operation and refrigerator coil cleaning; and the importance of energy efficient lighting and minimizing appliance electrical use (e.g. turning computers completely off). If tenets change furnace filter, provide instructions and filters.

Benefit:
Training provides the homeowner/tenant with the knowledge to effectively regulate comfort and energy consumption. The manual will serve as a hand reference guide.

Submittal:

1. Copy of manual, including an overall description of controls, the importance of energy efficiency, sustainable design ideals, and additional general green building information

2. Signed training confirmation letter for each unit, indicating owner has received training. Letter template provided by HMFA, Sustainable Community Design Administrator.

OM-3 Integrated Pest Management

Requirement:
Seal all wall, floor, and joint penetrations to prevent pest entry. Provide rodent and corrosion proof screens (e.g., copper or stainless steel mesh) for large openings.

Benefit:
Sealing of cracks and penetrations will minimize entry points for pests such as rodents and cockroaches.

I. FINAL APPROVED GREEN WORKSHEET

Review of Submitted Matrix and Application

rix Received by:	Tech Services Review	Items sent to Elizabeth for Approval and Review	Additional Tech Services Review if Necessary	Additional
		Elizabeth Robbins		Elizabeth Robl
		609.278.7414		609.278.7414
	In Plan&Spec? Yes/No	Approval and Review	In Plan&Spec? Yes/No	Approval and
Control				

n:

APPENDIX I:

VOC Guide

Interior Paints VOC limits, grams per liter (g/l)	VOC Limit
flat paints	50
Non-flat paints	150
Clear finishes	275

ADHESIVES, VOC Limit*, Less Water and Less Exempt Compounds in Grams per Liter	
Architectural Applications	**VOC Limit**
Indoor Carpet Adhesives	50
Carpet Pad Adhesives	50
Outdoor Carpet Adhesives	150
Wood Flooring Adhesive	100
Rubber Floor Adhesives	60
Subfloor Adhesives	50
Ceramic Tile Adhesives	65
VCT and Asphalt Tile Adhesives	50
Dry Wall and Panel Adhesives	50
Cove Base Adhesives	50
Multipurpose Construction Adhesives	70
Structural Glazing Adhesives	100
Single Ply Roof Membrane Adhesives	250

Specialty Applications	Current VOC Limit
PVC Welding	285
CPVC Welding	270
ABS Welding	400
Plastic Cement Welding	250
Adhesive Primer for Plastic	250
Computer Diskette Manufacturing	350
Contact Adhesive	80
Special Purpose Contact Adhesive	250
Tire Retread	100
Adhesive Primer for Traffic Marking Tape	150
Structural Wood Member Adhesive	140
Sheet Applied Rubber Lining Operations	850
Top and Trim Adhesive	250
Shoe, Luggage and Handbag Repair Adhesive	250

Substrate Specific Applications	VOC Limit
Metal to Metal	30
Plastic Foams	50
Porous Material (except wood)	50
Wood	30
Fiberglass	80
If an adhesive is used to bond dissimilar substrates together the adhesive with the highest VOC content shall be allowed.	

Sealants	VOC Limit
Architectural	250
Marine Deck	760
Nonmembrane Roof	300
Roadway	250
Single-Ply Roof Membrane	450
Other	420
Sealant Primers	**VOC Limit**
Architectural	
Non Porous	250
Porous	775
Modified Bituminous	500
Marine Deck	760
Other	750
* For low-solid adhesives or sealants the VOC limit is expressed in grams per liter of material as determined in paragraph (b)(32); for all other adhesives and sealants, VOC limits are expressed as grams of VOC per liter of adhesive or sealant less water and less exempt compounds as determined in paragraph (b)(31).	

Flooring Guide

Acceptable flooring choices marked with "X"					
	Hardwood [1]	Carpet [4]	Linoleum	Tile [5]	Carpet tile
Kitchen			X	X	
Bath				X	
Building Entry			X	X	
Apartment entry [3]	X		X	X	
Dining room	X		X	X	X
Living room	X	X [2]			X
Halls in apt	X	X [2]			X
Bedrooms	X	X [2]			X
Building corridors	X			X	X
[1] includes also bamboo flooring					
[2] Hardwood flooring is preferred in living rooms halls and bedrooms					
[3] includes doors from basements					
[4] Tack-down carpet preferred – If glue down, use low VOC glue					
[5] Ceramic, Granite, Recycled Glass, Brick/Stone					

Lighting Fixture Schedule

Lighting Requirements:

1. Energy Star fixtures in kitchen, halls and baths and common areas
2. Must include minimum 32 watt E-Star fixture in all bedrooms, living rooms and dining rooms
3. Exterior lighting must be Energy Star, MH or HPS with photocell daylight cutoff (non-utility fixtures)
4. All MH and HPS outdoor fixtures must be full cutoff.
5. Common area lighting plans must include occupancy sensors and daylight cutoff sensors where appropriate.
6. This schedule must be filled in and approved prior to project approval!

Fixture Designation	Fixture Manufacturer	Model number	Surface, pendant, recessed, wall, pole-mounted?	Lamp type [1]	Lamp part number	Lamp color temp.	Lamp watts	Fixture watts [2]	Ballast - magnetic or electronic	Is Fixture Energy Star certified?	Location: Interior, common area or exterior	For exterior fixtures: full cutoff?	Fixture control for common and exterior

[1] Incandescent (inc) , compact fluorescent (CFL), T5, T8, MH, HPS or other designation

[2] Including ballast watts

Appendix II: EEBA Window Flashing Detail

Text courtesy of GREEN AFFORDABLE HOUSING COALITION Fact Sheet No. 20
Images courtesy of the EEBA Builder's Guide

One of the biggest mistakes made in the construction industry is the assumption that doors and windows won't ever leak. Improper installation, poor quality or damaged products, and aging can all contribute to leaking problems. Proper sequence and installation of door and window flashings are of primary concern for a watertight assembly. Common off-the-shelf items such as pan flashings, self-adhesive liners, prefabricated sills, and formable flashings are available to flash door and window openings. Sealants, caulks, and gaskets should not be relied upon as the only defense against water entry. Construction details will vary depending on the wall system and type of window or door assembly, but the concept of layering the assembly so water is always shed to the exterior as it flows down remains constant.

The sequence for installing a window with proper flashing in a wood frame wall is described below. The illustrations on the following page show the installation of window flashings step-by-step.

Step 1: The proper installation of a weather barrier over the exterior wall sheathing is the first step. Use of housewrap is recommended.

Step 2: Cut the housewrap flush across the head rough opening followed by two diagonal cuts extending upward and outward from the top of the rough opening corners equal to the width of the flashing being used. Next, a vertical cut is made about _ of the way down the center of the rough opening followed by two diagonal cuts extending downward toward the bottom corners of the rough opening at the sill. These three cuts in the housewrap should look like an inverted Y in the opening.

Step 3: The side flaps of the housewrap are folded in through the jambs of the rough opening and fastened to the inside. The same is done at the sill. The top flap of the housewrap is folded up and temporarily secured so it can later be placed over the head flashing. Install a small backdam flush with the interior side of the sill opening.

Step 4: Properly flashing the sill is next. Formable or self-adhesive sill flashing should be applied to entirely cover the top of the sill plate, be long enough to extend up the jambs 3-4", and wide enough to overlap by 3-4" the outside of the housewrap. The flashing should be tight to the backdam and rough opening corners.

Step 5: Apply sealant or caulk around the exterior face of the rough opening at the jambs and head. For windows with nailing flanges, sealant can be applied to the back side of the flange.

Step 6: Install the window unit in the prepared opening.

Step 7: Install jamb flashing strips over the window's side nailing flanges. Next, install the head flashing strip flush with the rough opening, over the top window nailing flange, and long enough to extend over and beyond the jamb flashing strips by 2-3" on each side. All self-adhesive flashing should be pressed

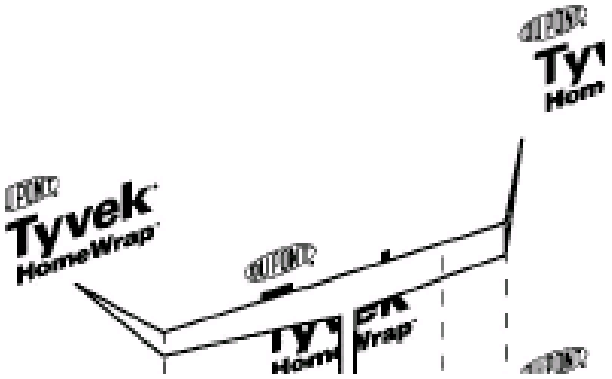

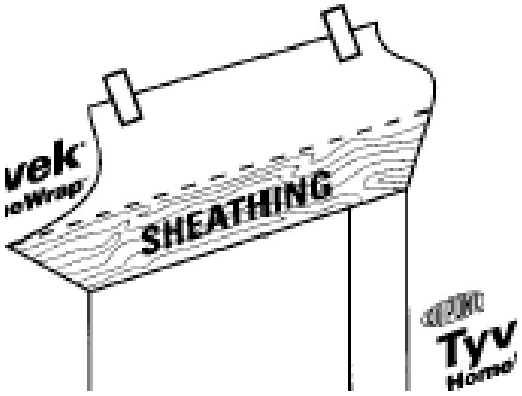

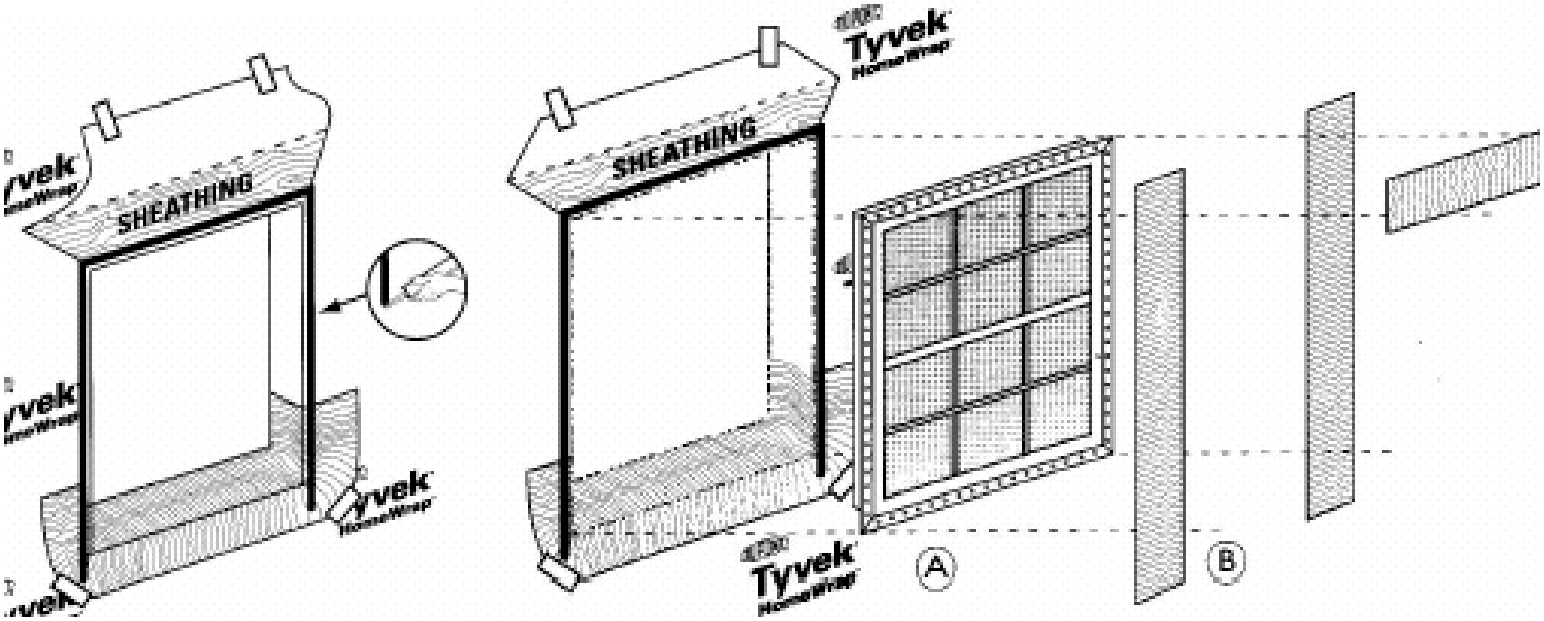
SHEATHING
Tyvek
HomeWrap
SHEATHING
Tyvek
HomeWrap
Tyvek
HomeWrap
A
B

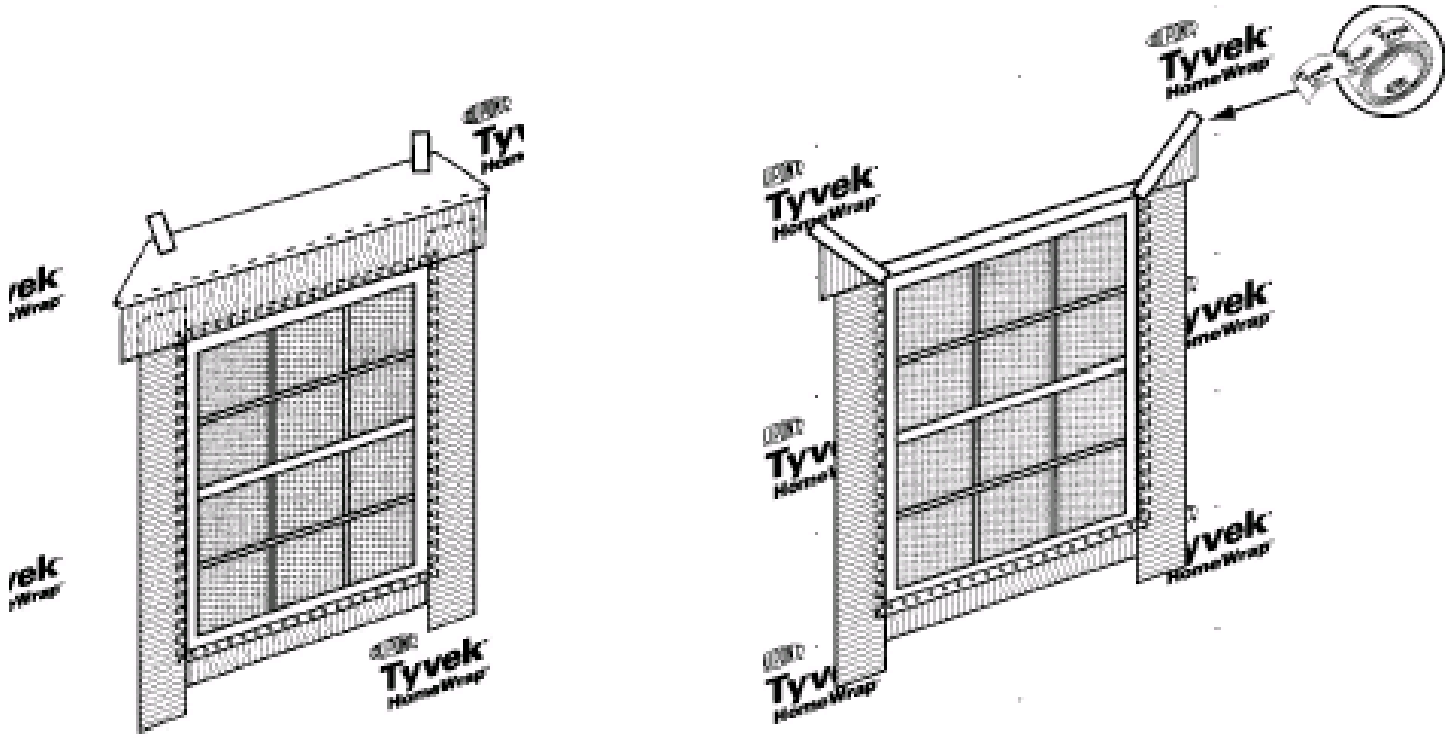
Tyvek
HomeWrap
Tyvek
HomeWrap
Tyvek
HomeWrap

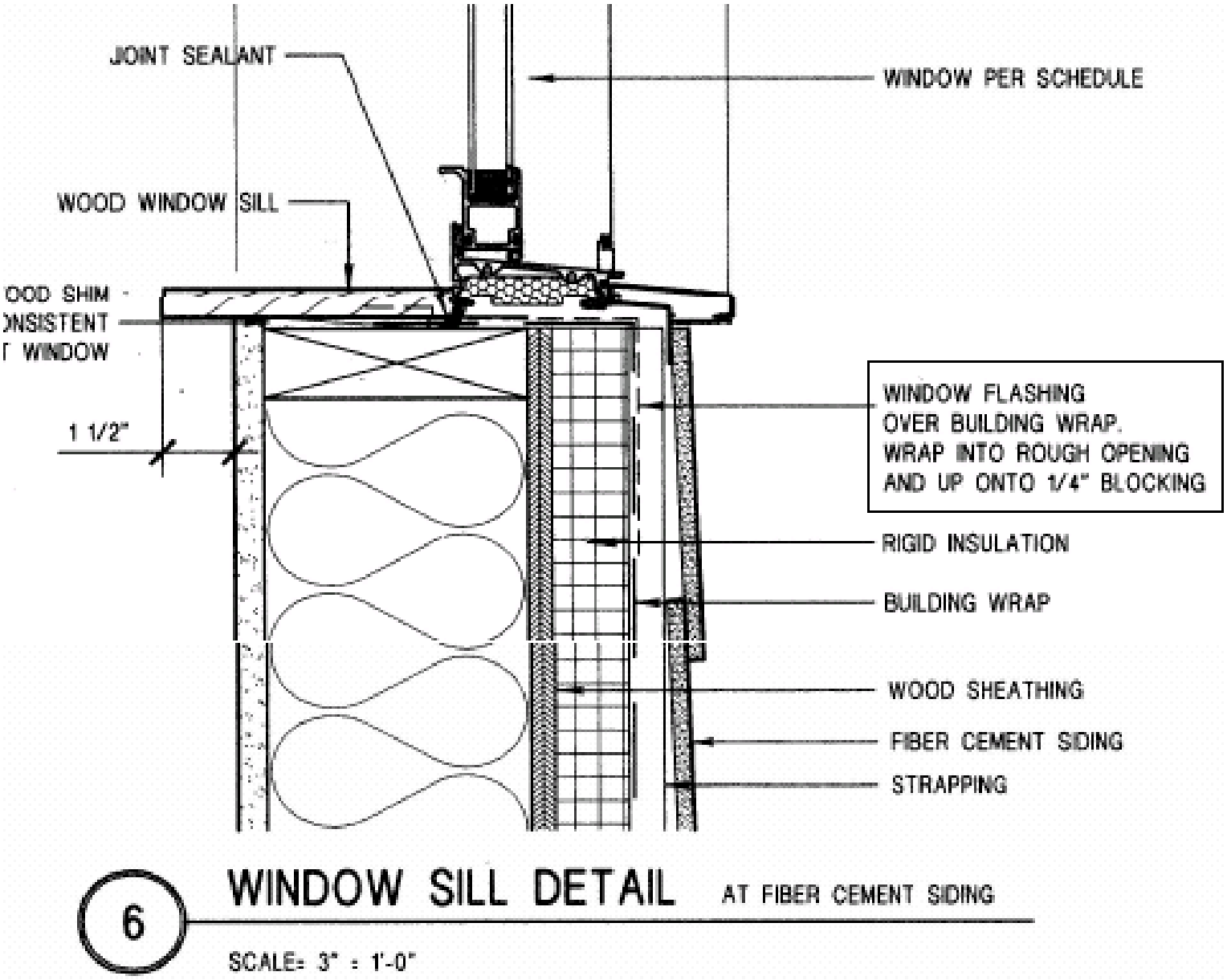

Courtesy of the EEBA Builder's Guide and www.buildingscience.com

Appendix III: Operations and Maintenance

Sample Training Confirmation Letter

November 16, 2006

Mary Uschak
NJHMFA
NJ Green Homes Office
P.O. Box 18550
Trenton, NJ 08650-2085
Fax: 609.278.1754

Dear Ms. Uschak,

This letter is to certify that I have reviewed and received training in the following areas:

___ Operations & Maintenance Manual
- ___Maintenance Schedule
- ___Installation Manuals
- ___General Green Building Information
- ___List of Green Point / Tax Credit Technologies Importance & Implementation

___ Programming the Thermostat and the energy saving principles used
___ Changing Filters
___ Lighting Controls and Timing
___ Ventilation Controls – timing and energy saving principles
___ Refrigerator Coil/Grill Cleaning
___ Replacement Lighting

I understand that, in the future, I will ensure that my replacement is trained in Energy Saving and Environmentally Conscious Operations & Maintenance Procedures.

Regards,